

BLAUPUNKT

nikpol

AP-5CL288FD0AU

Integrated Refrigerator Only

Features & Benefits

Design

Fully integrated installation

Fully automatic defrosting in the refrigerator compartment

Electronic temperature control, readable via LED

Easy-to-clean, bright interior

LED interior lighting in the refrigerator compartment

Convenience and safety

LED electronic control

1 Compressor /1 independent cooling system

Refrigerator compartment

Refrigerator compartment: 294 l net capacity

Super Cool

5 shelves made of safety glass, 4 of which are height-adjustable

5 continuous door shelves, 1 of which is height-adjustable

Transparent Vario bowl for fruit and vegetables, covered by a safety glass plate.

Bottle rack

Egg Tray

Specification

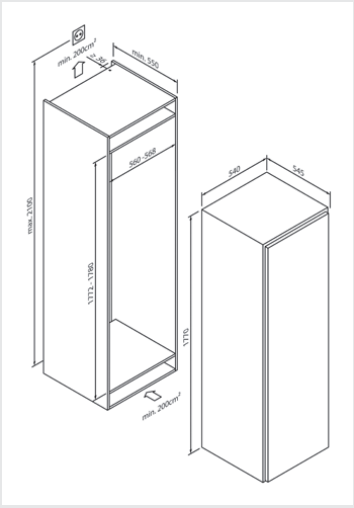

Dimensions

Appliance:
H1770× W540× D545mm

Net Capacity

294 L

Equipment Feature

Electronic/Digital display

Reversible Door Hinge

Easy to clean

Efficiency Rating

Energy Efficiency Class: D

Weight

Net: 49.5kg

Gross: 53.0kg

Type

Fully integrated

Consumption

Energy Efficiency Class: D

Net capacity 294 l

Energy consumption: 89 kWh/yr

Connection load: 90W/220-240V

Frequency (in Hz):50Hz

Noise level: 39 dB(A) re 1 pW

Climate class: SN-ST

Nikpol | 1300 645 765 | www.nikpol.com.au | sales@nikpol.com.au

Head Office (VIC) | 6-12 Fairchild Street Heatherton VIC 3202
QLD | 19 William Farrior Place Eagle Farm QLD 4009
NSW | Unit 2, 48-52 Lyn Parade Preston NSW 2170