

BLAUPUNKT

nikpol

AP-5FG288FD0AU

# Integrated Freezer Only

## Features & Benefits

### Design

Fully integrated installation

Easy-to-clean, bright interior

LED interior lighting in the freezer compartment

Electronic temperature control, precisely digitally readable

### Convenience and safety

LED electronic control

1 Compressor /1 independent cooling system

### Refrigerator compartment

Capacity 197L

6 freezer drawers

2 freezer compartments

Freezing capacity: 11.5 kg in 24 hours

Storage time in case of malfunction: 6 hours

Super Freeze

Frost Free

## Specification

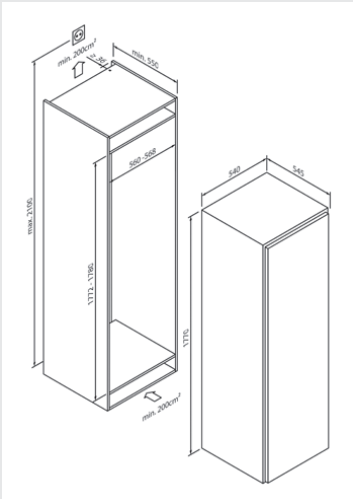

### Dimensions

Appliance:
H1770× W540× D545mm

### Net Capacity

294 L

### Equipment Feature

Electronic/Digital display

Reversible Door Hinge

Easy to clean

### Efficiency Rating

Energy Efficiency Class: D

### Weight

Net: 59.0kg

Gross: 63.0kg

### Type

Fully integrated

## Consumption

Energy Efficiency Class: D

Net capacity 197l

Energy consumption: 185 kWh/yr

Connection load: 207W/220-240V

Frequency (in Hz):50Hz

Noise level: 40 dB(A) re 1 pW

Climate class: SN-T

**Nikpol** | 1300 645 765 | www.nikpol.com.au | sales@nikpol.com.au

**Head Office (VIC)** | 6-12 Fairchild Street Heatherton VIC 3202
**QLD** | 19 William Farrior Place Eagle Farm QLD 4009
**NSW** | Unit 2, 48-52 Lyn Parade Preston NSW 2170