LEGMT-160D

nikpol™

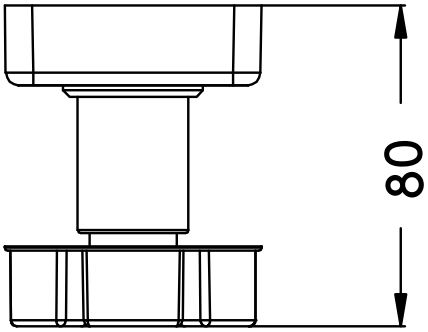

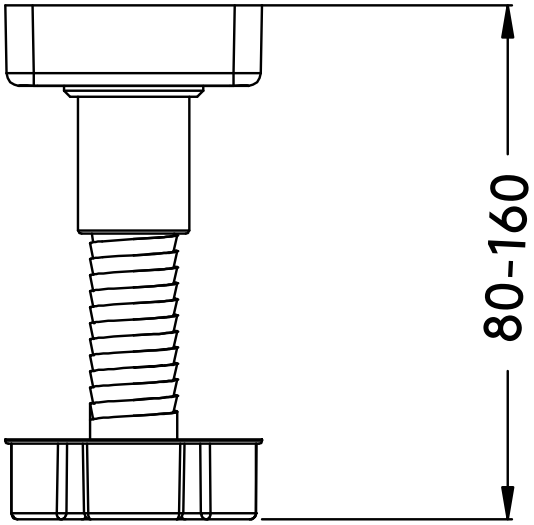

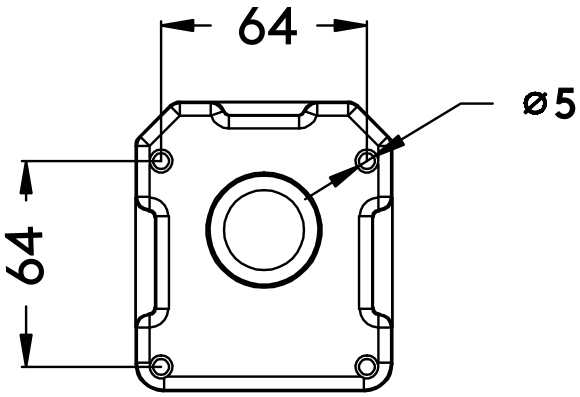

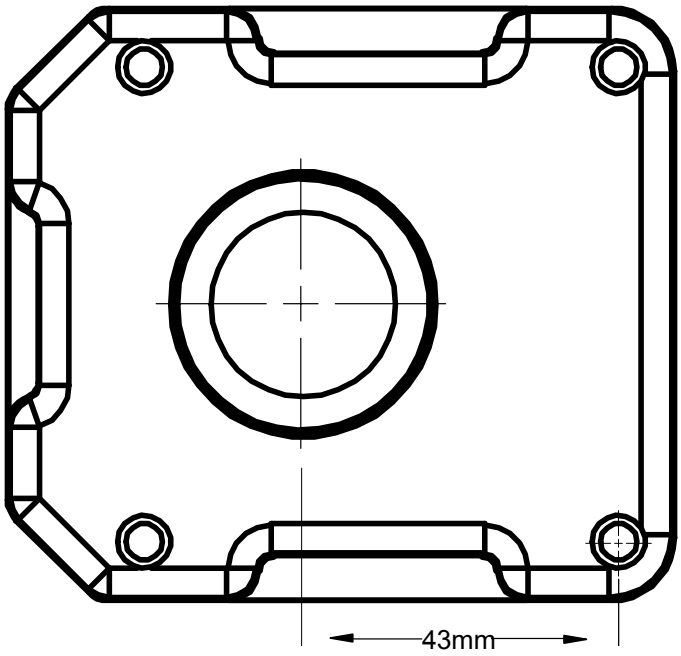
43mm

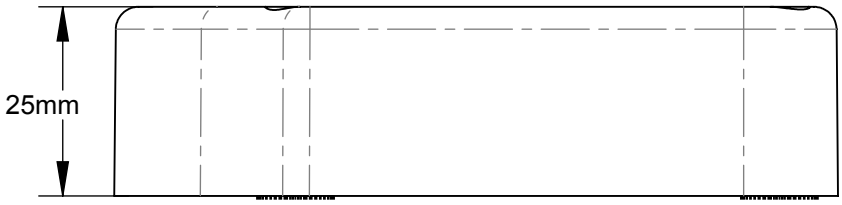
25mm

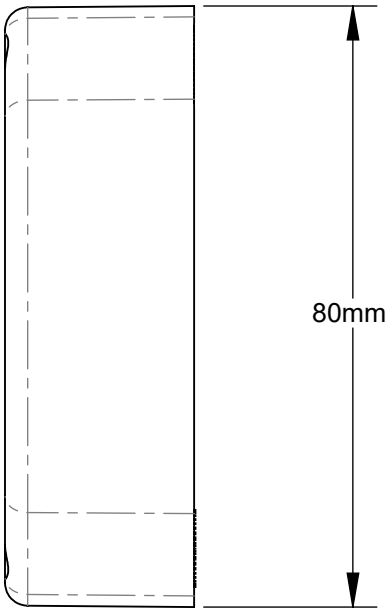
80mm

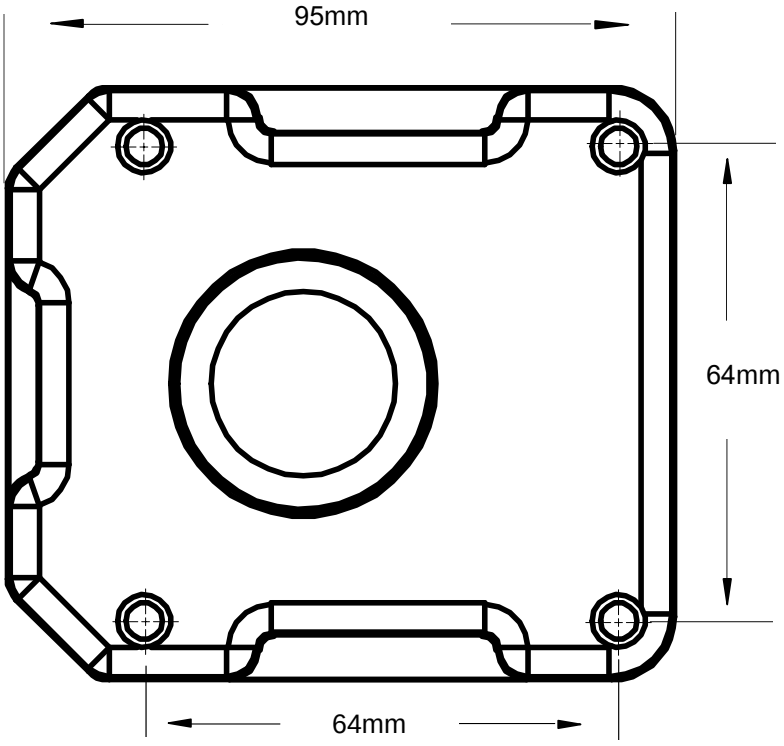
95mm
64mm
64mm