LEGMT-160

nikpol™

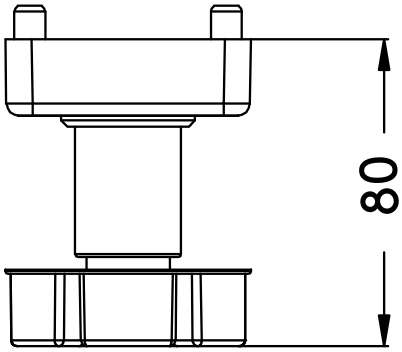

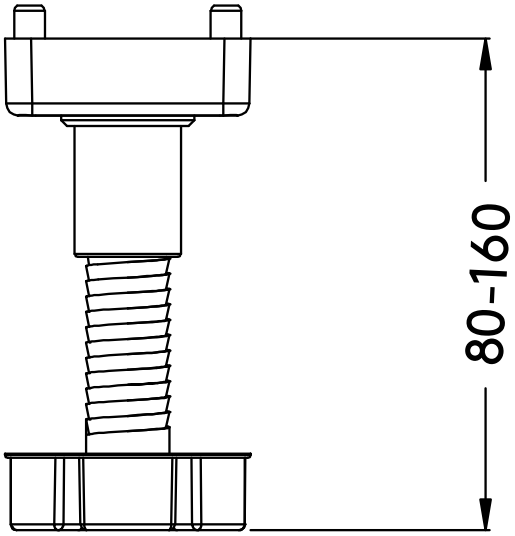

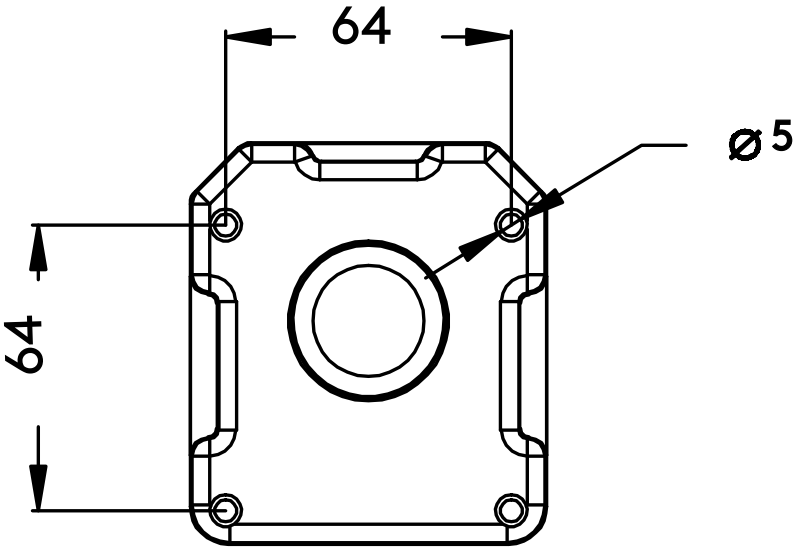

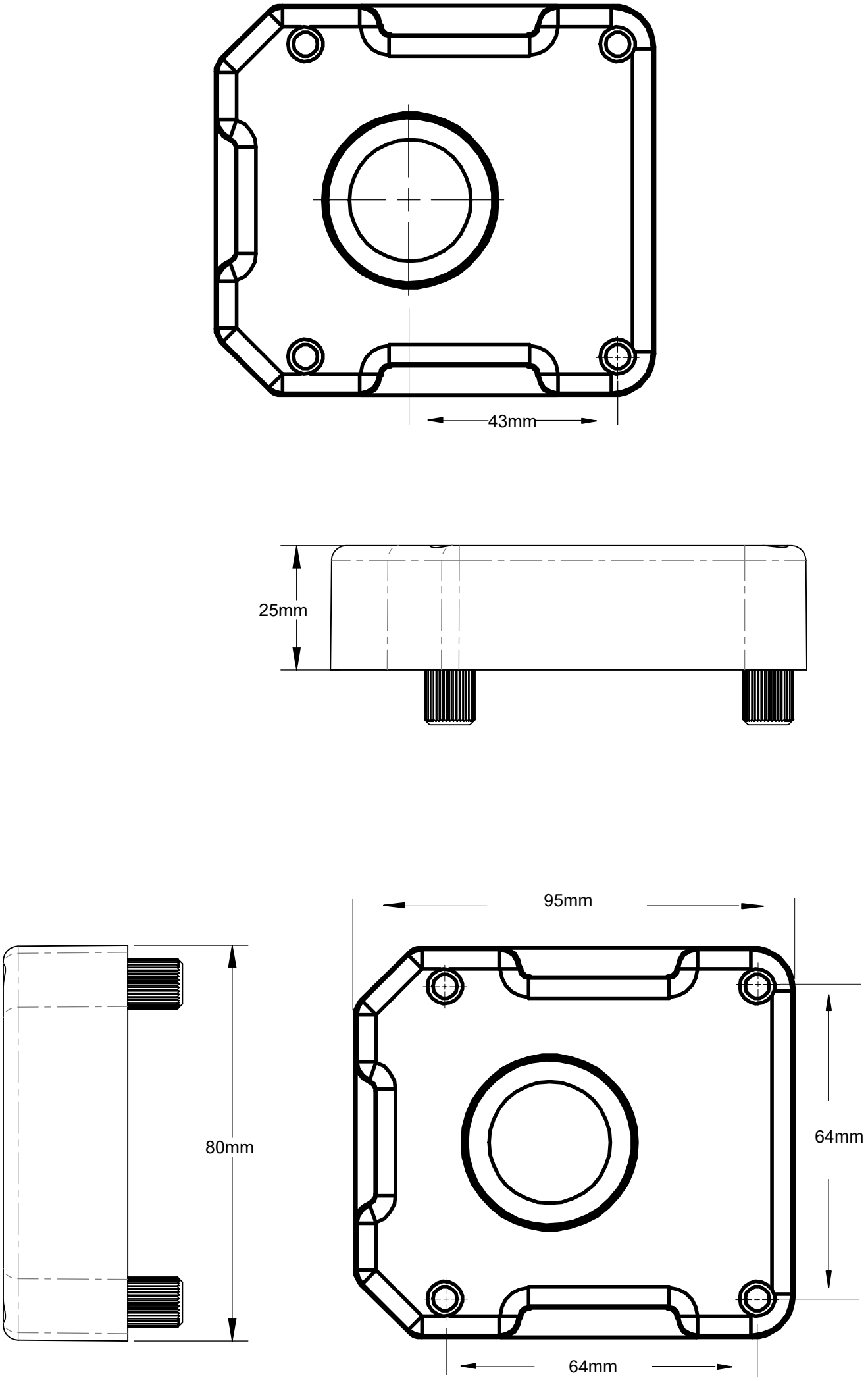
43mm
25mm
95mm
80mm
64mm
64mm