nikpol

pavia data sheet

handle specs:

cutout specs:

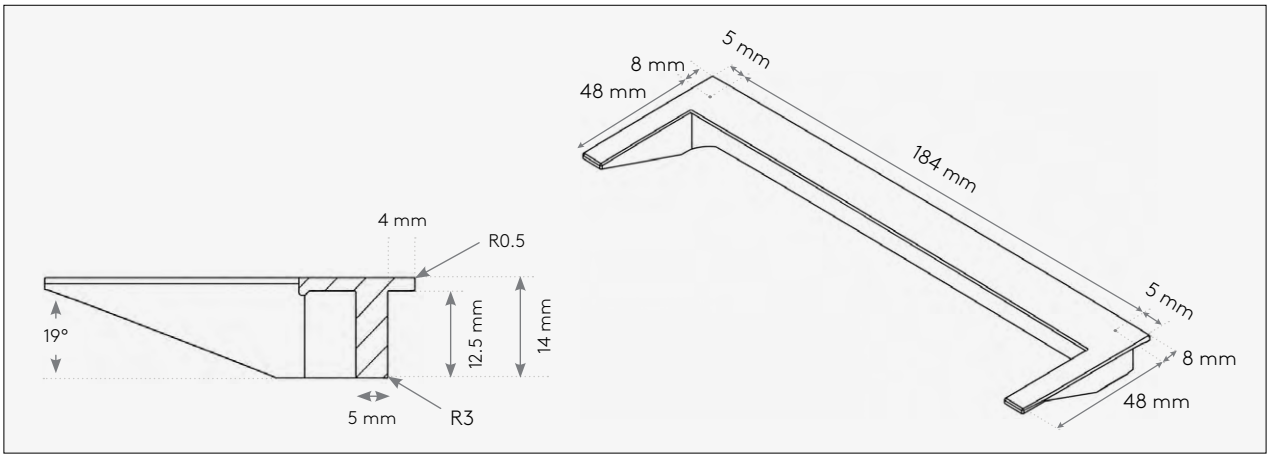

finishes:

PAVIA-184PW **PW:** Premium White	**PAVIA-184WG** **WG:** White Grey	**PAVIA-184AG** **AG:** Angora Grey	**PAVIA-184SP** **SP:** Dusk Blue	**PAVIA-184RG** **RG:** Reed Green	**PAVIA-184GR** **GR:** Graphite

Disclaimer: Colours are indicative only. Visit a Nikpol showroom for accurate colour representation.