FOUNDER LAZY SUSAN W/BASE

	Type	Q'ty		Type	Q'ty		Type	Q'ty		Type	Q'ty
A	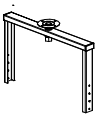	1pc	B	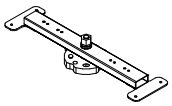	1pc	C	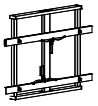	1pc	D		1pc
E	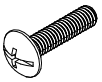	4pcs	F		4pcs	G	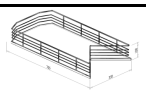	2pcs	H	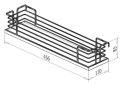	4pcs

Step 1: Use attached pattern to find out the screw holes for mechanism.

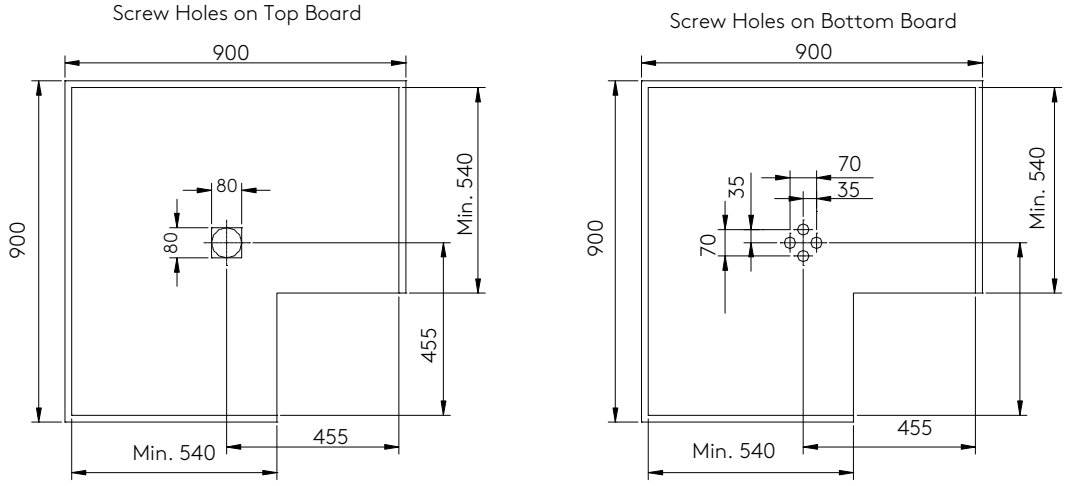

Step 2: Assembling

Step 3: Screw the revolving base on bottom of cabinet.

Adjustable damper

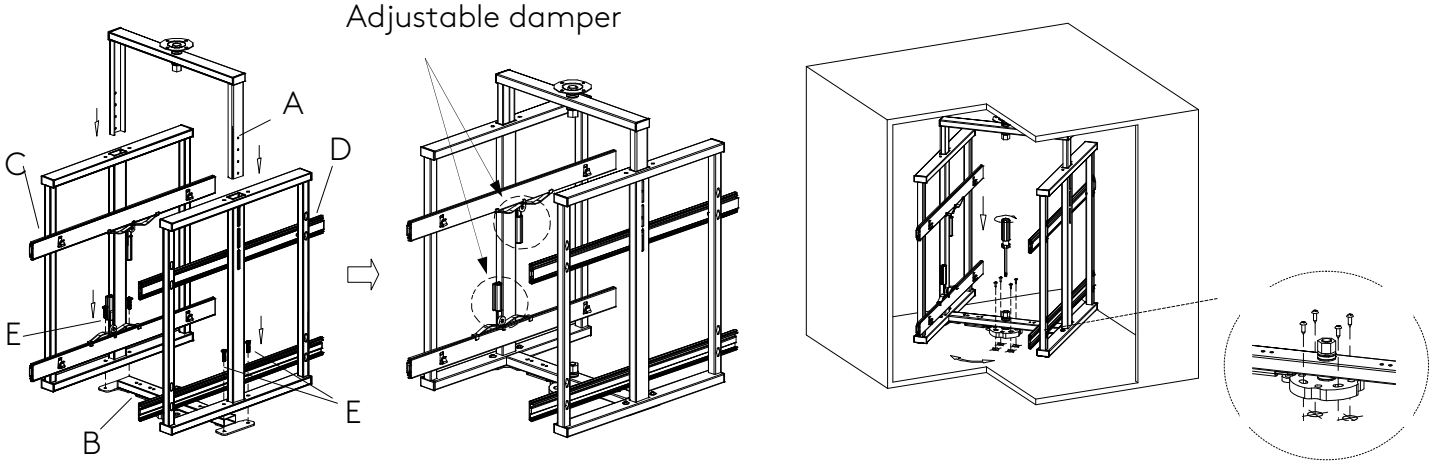

Head Office (VIC)
6-12 Fairchild Street
Heatherton VIC 3202

QLD
35 Wentworth Place
Banyo QLD 4014

NSW
Unit 2/48-52 Lyn Parade
Prestons NSW 2170

Tel 1300 645 765
Web www.nikpol.com.au
Email sales@nikpol.com.au

Step 4: Pull the adjustable frame to top of cabinet, use screw F to fix A and C and D.

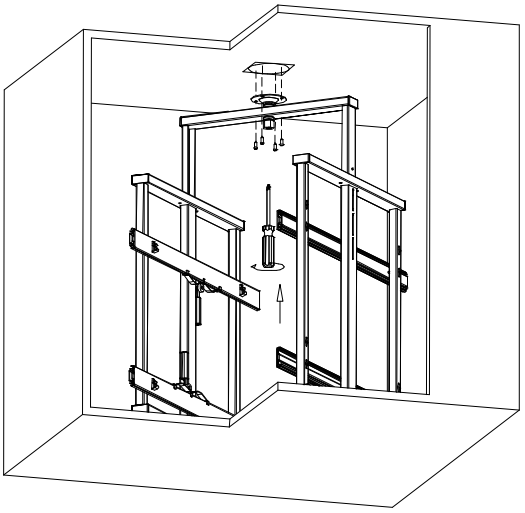

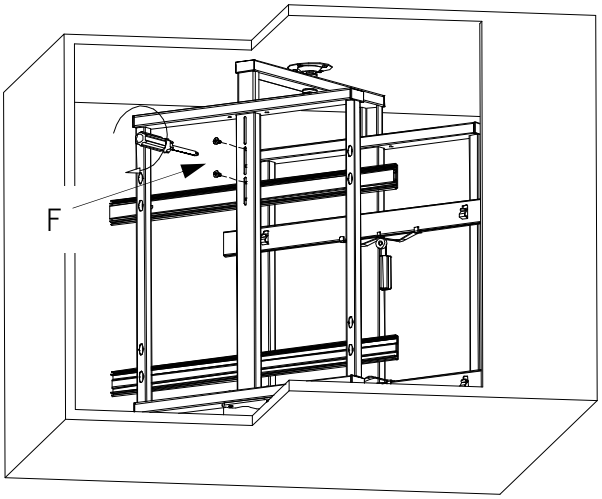

Step 5: Clip on basket.

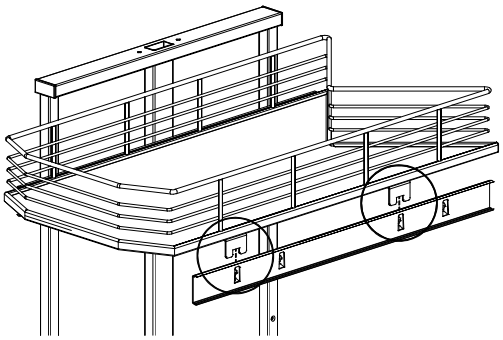

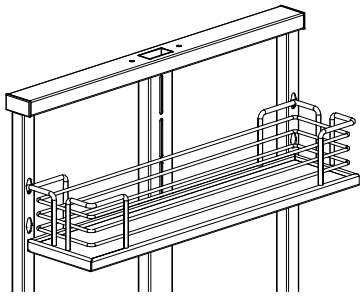

Step 6: Finished

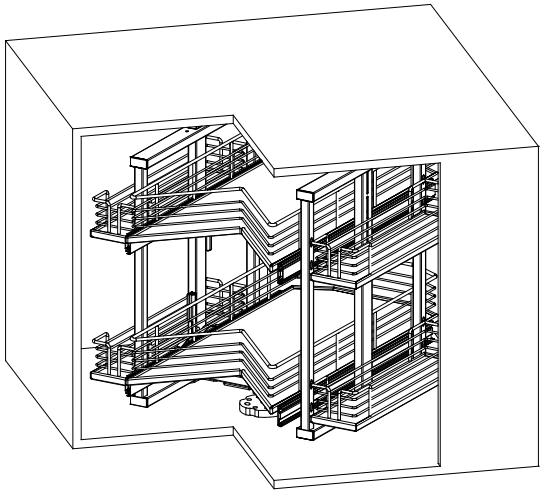

Pie-Cut type

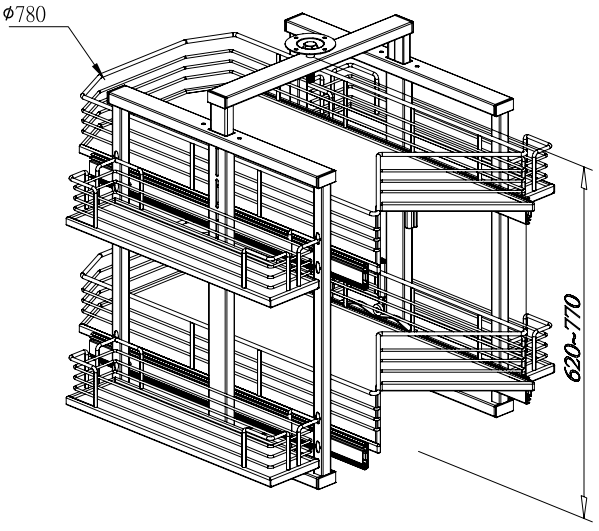

Head Office (VIC)
6-12 Fairchild Street
Heatherton VIC 3202

QLD
35 Wentworth Place
Banyo QLD 4014

NSW
Unit 2/48-52 Lyn Parade
Prestons NSW 2170

Tel 1300 645 765
Web www.nikpol.com.au
Email sales@nikpol.com.au

FOUNDER LAZY SUSAN W/BASE

nikpol™

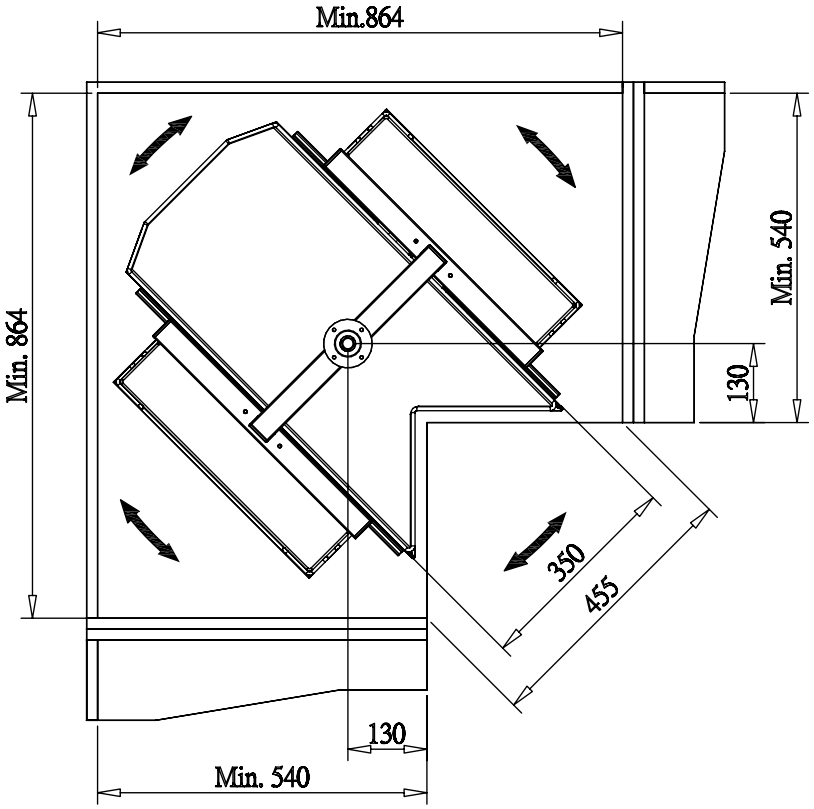

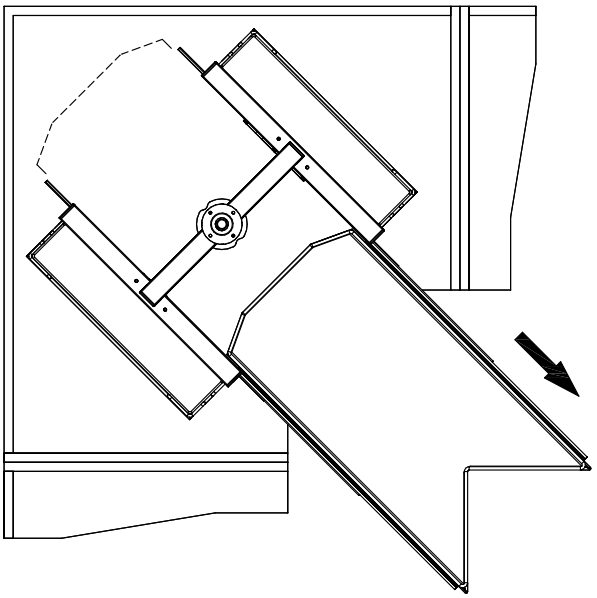

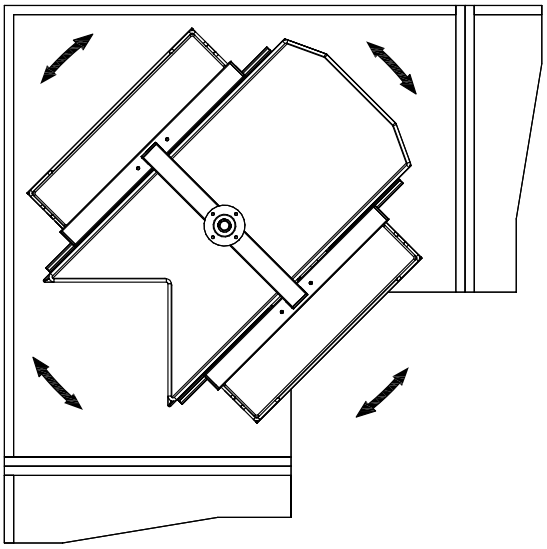

Head Office (VIC)
6-12 Fairchild Street
Heatherton VIC 3202

QLD
35 Wentworth Place
Banyo QLD 4014

NSW
Unit 2/48-52 Lyn Parade
Prestons NSW 2170

Tel 1300 645 765
Web www.nikpol.com.au
Email sales@nikpol.com.au